Sweden – pop stars, tennis stars and engineering stars

grindex

Sweden is renowned for producing stars and for unsurpassed engineering in fields from automotive to agriculture.

From that history of endeavor and excellence comes Grindex. A world- leader in electrical submersible pump technology for such demanding applications as construction, mining and heavy industry.

The pumps are known for their reliability, durability and dependability and, thanks to the built-in SMART motor protection and the air valve, the pumps can run unsupervised for longer periods, and even run dry for a length of time.

Only the Swedes could've come up with this one! Tack så mycket.*

* Thanks so much.

When all parts are greater than the sum

Grindex pumps are all about return on investment. Their renowned, time-tested Swedish engineering and their focus on quality, performance, and durability permeate everything they do – down to every single screw. Their complete commitment and responsibility distinguish them from the rest.

Low life-cycle cost

Just as only ten percent of an iceberg is visible, only the pump's price tag is obvious at first. However, all recurring costs – installation, operation, inspections, and service – affect the pump's total cost of ownership. With Grindex pumps you minimize the need for maintenance, reduce the number of unplanned and planned service standstills, and experience a prolonged equipment lifespan.

Installation: just plug and pump

- All in the head of the pump – SMART
- Easy to install, no external starting box needed
- Ergonomically designed for easier handling

Operation: lasting performance

- Long-term wear resistance – durable Hard Iron™ impeller
- Spin-out grooves keep debris from entering the seal
- Air valve – snoring / dry running capabilities
- Intelligent protection with SMART
- High efficiency

Service: simplified maintenance

- Service-friendly with standard tools
- Uniform design, service one – service all
- Fast, easy adjustment of the impeller
- Few components to maintain
- Ergonomic design of the strainer

On site inspections: speedy check-ups

- Quick, easy access
- Large opening of the electrical compartments for easy access to components
- Removable design of the strainer for easy inspection of the hydraulic parts
- External access for checking the oil and seal

Pioneering technology

Grindex's dedication to develop customized solutions has formed the foundation for several breakthrough innovations. These inventions are now part of all their pumps, and constitute the main factor behind their unbeatable reliability, durability, and dependability. Their pumps simply thrive in harsh conditions.

SMART – protects the motor

Grindex's SMART electronic surveillance system, first developed in 1990, is a vital element in their pumps. With its three-fold motor protection, it shields the pumps from electrical problems.

- Built-in plug and pump; no need for external start boxes
- Phase-failure guard protects against phase loss
- Temperature guard stops the pump if it reaches high temperature
- Automatic restart after stop
- Phase-sequence control ensures that impellers turn in right direction

Wear / hydraulic parts – prolong the lifespan

Thanks to exceptional wear resistance, the wear and hydraulic parts help to prolong the lifespan of Grindex pump equipment, while securing high efficiency.

- Minimize the performance drop – thanks to innovative design
- Improve operation and performance in harsh conditions
- Optimized design and materials for specific applications, e.g. drainage, sludge, and slurry

Air valve – cools the pump

Grindex invented and patented the worlds first air valve in 1960, and have included this feature in most pump models. Thanks to this, and their built in motor protection, their pumps are able to run unsupervised for long periods. In fact – for any models with the air valve, they guarantee them with a 2 year dry run burnout warranty!

- Enables pump to run dry for a length of time
- Minimizes the risk of operation interruptions
- Minimizes the need for maintenance

Drainage pumps

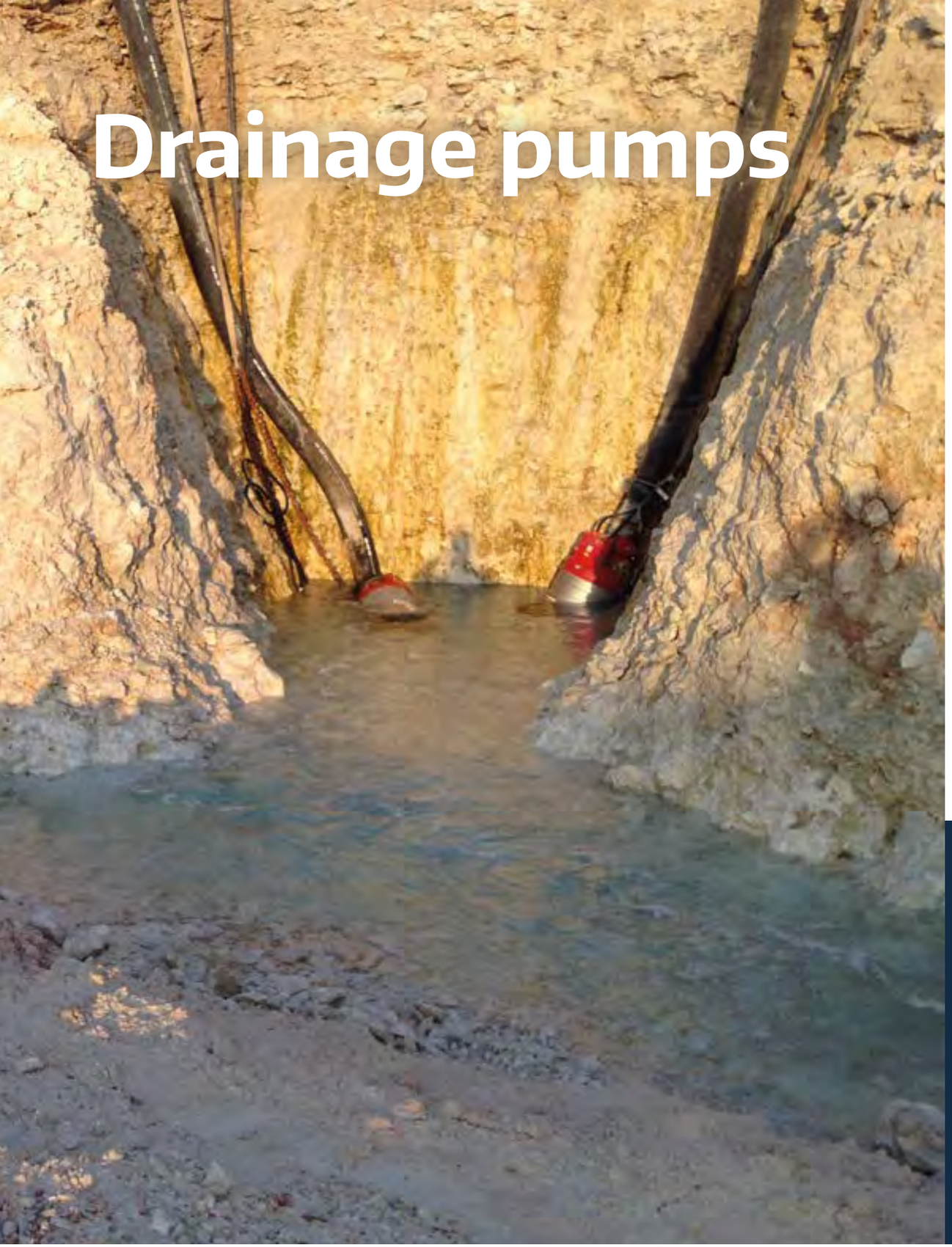

Grindex drainage pumps are heavy-duty industrial strength, yet light and highly portable.

Grindex's drainage pumps are made for professional use in tough applications like mines, construction sites, tunnel sites, rental applications, and other demanding industries. A drainage pump is suitable when you need to pump large quantities of dirty water: head 15–200 meters, flow 6–350 liters / second with abrasive particles in sizes up to 12mm. The pumps can run dry without problems (excludes Mega) – thanks to a unique valve that enables air cooling of the motor – no babysitting needed.

Did you know?

Revolutionary lightweight pump

Grindex was founded in 1940 by engineers Kristensson and Grähs. When Kristensson came across a new product – a submersible drainage pump – he refined the concept and launched a lightweight pump that could run dry – thanks to the patented air valve.

1960: Standard, the first pump

During the early 1960s, Grindex's first pump became two, Minor and Major. Soon, the range expanded to five sizes.

Small drainage pumps | Micro, Milli, Mini

Grindex's range of small, single phase drainage pumps are compact, lightweight and ultraportable, aimed at construction, tunneling, mining, and clean-up jobs.

Micro, with its low power consumption is ideal when running on a generator. Milli resembles Micro, but enables low suction down to only a few millimeters – thanks to the unique non-return valve. All pumps excel when reliability and easy-handling are essential and are built to handle contaminated water, pH 5–8, and water containing relatively abrasive solids.

Small drainage pumps 50 Hz				
	discharge connection	phase (ph)	max power consumption (kW)	weight (kg)
1. Micro	2"	1~	0.6	12
2. Milli	2"	1~	0.6	13
3. Mini	2"	1~	1.2	14.5

Micro – Mini 50 Hz

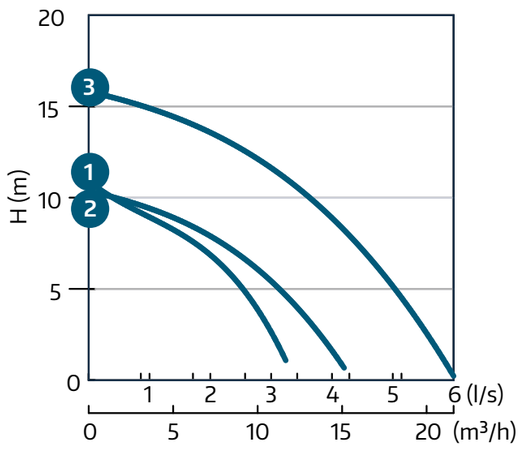

Drainage pumps – Micro, Mini, and Milli

Solid – sludge pump for larger solids

Pumping of larger particles

The Solid sludge pump shares functionality with our smaller drainage pumps. See page 50

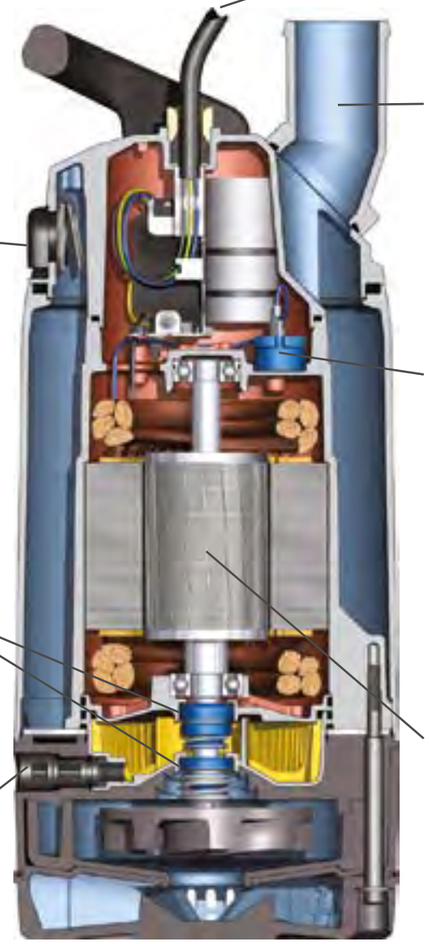

10 Meters of cable

- selection of plugs available

Discharge

- Easily positioned in both horizontal and vertical position depending on application
- Threaded or hose connection for outlet

Air valve

- Enables the pump to run dry without operation interruptions – thanks to air cooling
- Grindex invented and patented the world's first air valve in 1960

Thermal protection

- Thermal protection of the motor prevents overheating

Double mechanical seal

- Lower seal made of silicone carbide
- Upper seal made of carbon – aluminum oxide

Inspection plugs

- Quick and easy inspection of the seal / oil condition

Shaft unit / stator

- Optimized for submersed operations
- High efficiency thanks to water-cooled design
- Extended motor lifetime with high-temperature tolerance

Options

Level Regulator

Low Suction Collars

For temporary low suction applications, Micro and Mini can be equipped with low suction collars allowing down-to-the-floor pumping. For more permanent use, Milli is your choice.

Medium drainage pumps

Minex, Minette, Minor, Major, Master, Matador

Grindex medium sized drainage pumps are used in applications like tunneling, mining, and construction. The revolutionary hydraulic design ensures high wear resistance and dramatically reduces performance drop due to long time wear.

The internal starter, SMART motor protector, and optional level regulator provide fully automatic protection and control without the need for external starter – plug and pump.

Most Grindex pumps can be converted from N version to H version or vice versa.

Medium drainage pumps 50 Hz – N versions	discharge connection	phase (ph)	max power consumption (kW)	weight (kg)
1. Minex	2"	1~, 3~	1.1–1.6	21.5–25
2. Minette	3"	1~, 3~	1.9–2.7	29
3. Minor N	4"	3~	4.4	50
4. Major N	4"	3~	6.6	50
5. Master N	6"	3~	11.7	80
6. Matador N	6"	3~	20	131

Medium drainage pumps 50 Hz – H versions	discharge connection	phase (ph)	max power consumption (kW)	weight (kg)
3. Minor H	3"	3~	4.4	50
4. Major H	3"	3~	6.6	50
5. Master H	4"	3~	11.7	80
6. Matador H	4"	3~	20	131
7. Master SH	3"	3~	11.7	98

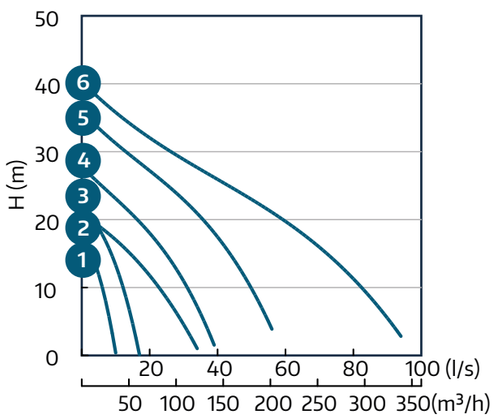

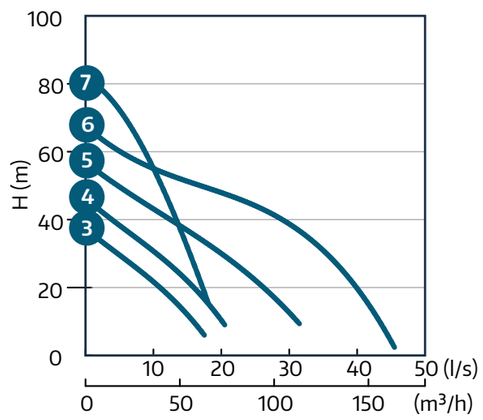

Soft starter

- Smoother motor acceleration protects the pump
- Reduces equipment wear, mechanical stress, and the starting current
- Optionally replaces the Star / Delta (YD) start and Direct on line (DOL) (Master and Matador)

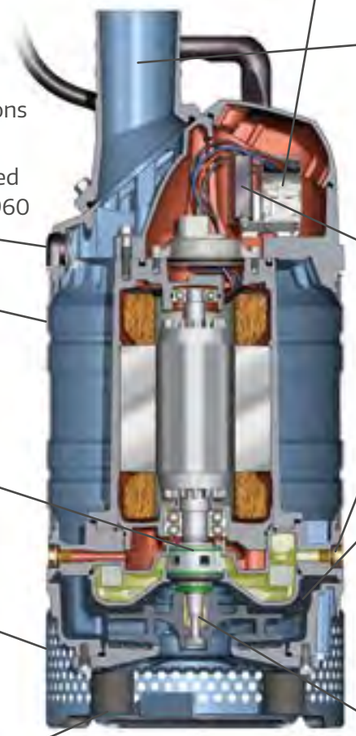

Air valve

- Enables the pump to run dry without operation interruptions – thanks to air cooling
- Grindex invented and patented the world's first air valve in 1960

Outer casing

- Stainless steel
- Cools the motor, which leads to high efficiency

Cartridge seal

- Patented, leakage preventing seal technology

Strainer

- Stainless steel
- Durability – only the size of particles that the pump can handle goes into the strainer

Shock absorbers

- Minor to Matador

Discharge

- Easily positioned in both horizontal and vertical position
- Threaded or hose connection for outlet

Smart

- Grindex's SMART electronic surveillance system

Inspection plugs

- Quick and easy inspection of the seal / oil condition

Wear parts

- Exceptional wear resistance thanks to closed impeller in Hard Iron™
- Nitrile or polyurethane (optional)

Single adjustment sleeve

- Quick readjustment to as new performance (N and H versions)

Options

Level Regulator

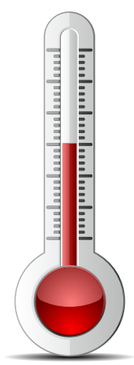

Warm water version

Pumps can be delivered in warm water version 70° C (standard 40° C).

Zinc anodes

Our zinc anodes provide protection against galvanic corrosion, mainly in applications involving salt water.

Large drainage pumps | Maxi

Over the years, the Maxi pump has proven to be an ideal pump for heavy-duty drainage applications.

Be it construction, mining or industrial applications, the robust and reliable design combined with ease of maintenance make it the pump of choice for hundreds of customers around the world.

Maxi 50 Hz				
	discharge connection	phase (ph)	max power consumption (kW)	weight (kg)
1. Maxi L	8"	3~	33	285
2. Maxi N	8"	3~	41	280
3. Maxi H-Lite	4"	3~	28	210
4. Maxi H	4"	3~	41	240
5. Maxi SH	4"	3~	41	270

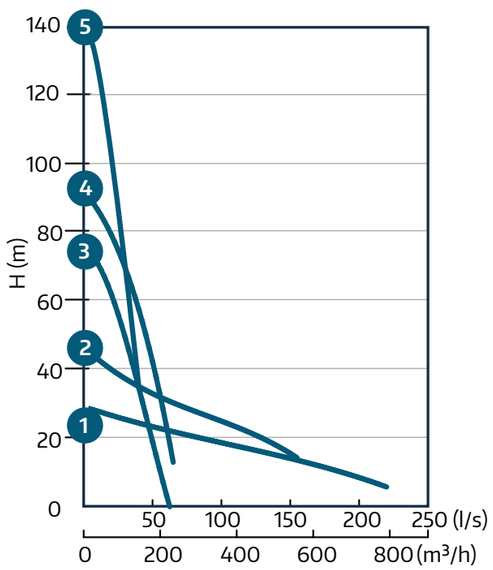

Maxi H-Lite is built on well-proven hydraulics from Grindex and fills the gap between Matador and Maxi.

Air valve

- Enables the pump to run dry without operation interruptions – thanks to air cooling
- Grindex invented and patented the world's first air valve in 1960

Thermal protection

- Thermal protection of the motor prevents overheating

Inspection plugs

- Quick and easy inspection of the seal / oil condition

Single adjustment Sleeve

- Quick readjustment to as new performance (N and H versions)

Pump starter

- Series GSP 32-100 is a 3-phase starter panel for manual operation

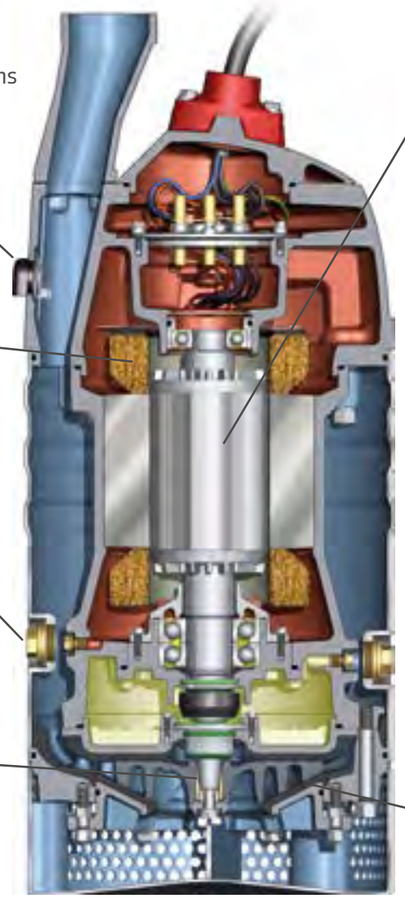

Shaft unit / stator

- Optimized for submersed operations
- High efficiency thanks to water-cooled design
- Extended motor lifetime with high-temperature tolerance
- Class H standards; best insulation available – thanks to capillary impregnation

Wear parts

- Polyurethane or nitrile (optional)

Options

Tandem Connections

Zinc anodes

Wear parts / Hydraulic parts

Level Regulator

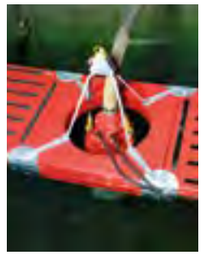

Pump raft system

Large drainage pumps | Magnum

Launched in 2000, the Magnum pump is a durable pump suitable for drainage applications in a variety of segments.

No matter if it's within construction, mining or industrial applications, hundreds of customers around the world rely on Magnum to perform the toughest of jobs. Its high-quality, reliable design combined with the ease of maintenance make it a great choice.

Magnum 50 Hz				
	discharge connection	phase (ph)	max power consumption (kW)	weight (kg)
1. Magnum L	10"	3~	62	540
2. Magnum N	8"	3~	62	540
3. Magnum H	6"	3~	64	540

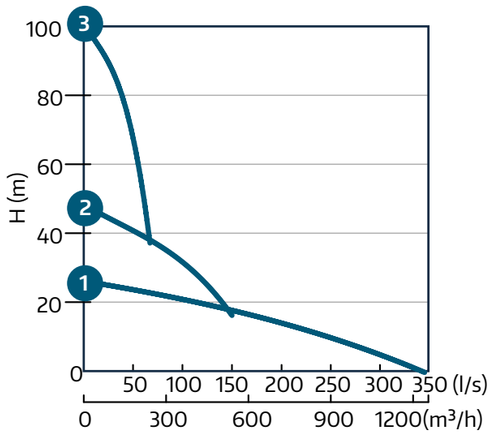

Air valve

- Enables the pump to run dry without operation interruptions – thanks to air cooling
- Grindex invented and patented the world's first air valve in 1960

Shaft unit / stator

- Optimized for submersed operations
- High efficiency thanks to water-cooled design
- Extended motor lifetime with high-temperature tolerance
- Class H standards; best insulation available – thanks to capillary impregnation

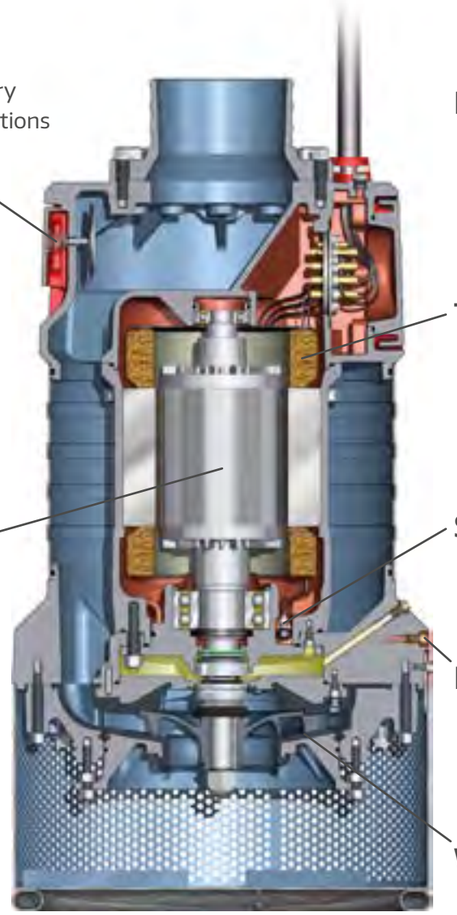

Pump starter

- Series GSP 32-170 is a 3-phase starter panel for manual operation

Thermal protection

- Thermal protection of the motor prevents overheating

Surveillance

- Leakage sensor

Inspection plugs

- Quick and easy inspection of the seal / oil condition

Wear parts

- Available in polyurethane

Options

Tandem Connections
Available on H version

Zinc anodes

Level Regulator

Pump raft system

Large drainage pumps | Mega

Mega, made of cast iron, is ideal for operations in deep excavations in which very high-head pumping is needed, such as in open pit mines and underground mines.

Other typical applications include quarries and tunneling projects. It's designed to handle pH levels 6–13, and zinc anodes are available for extra protection.

Mega H, high pressure

Mega 50 Hz				
	discharge connection	phase (ph)	max power consumption (kW)	weight (kg)
1. Mega N	6"	3~	95	900
2. Mega H	4"	3~	95	985
3. Mega N Inox	6"	3~	90	925
4. Mega H Inox	4"	3~	90	1015

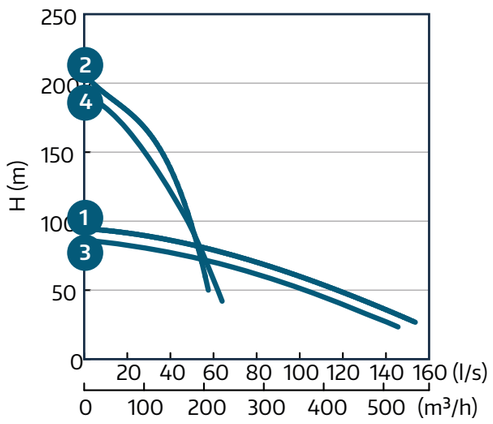

Wear parts

- Polyurethane or nitrile (option)

Thermal protection

- Thermal protection of the motor prevents overheating

Bearings

- Carefully selected from well-known suppliers for Grindex-specific clearances and tolerances
- Pre-greasing ensures correct lubrication
- PT 100 sensor (optional)

Inspection plugs

- Quick and easy inspection of the seal / oil condition

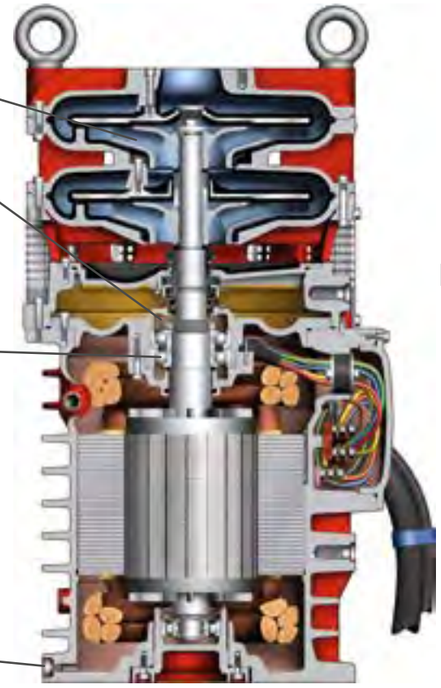

Mega H, high pressure

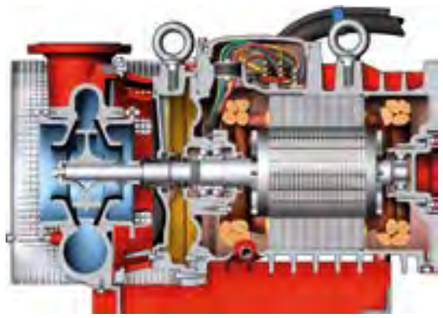

Mega N, normal pressure

Pump starter

- Series GSP 32-170 is a 3-phase starter panel for manual operation
- Automatic duty with level regulators optional
- Available with DOL or Star / Delta configuration
- Main supply switch with short circuit and motor overload protection
- Monitoring of built-in thermal contacts with manual reset
- Phase guard indicating correct rotation/phase failure
- Supervision relay for PT 100

Options

Different stainless steel And coating options

Ask for more details.

Stand

Zinc anodes

Pump raft system